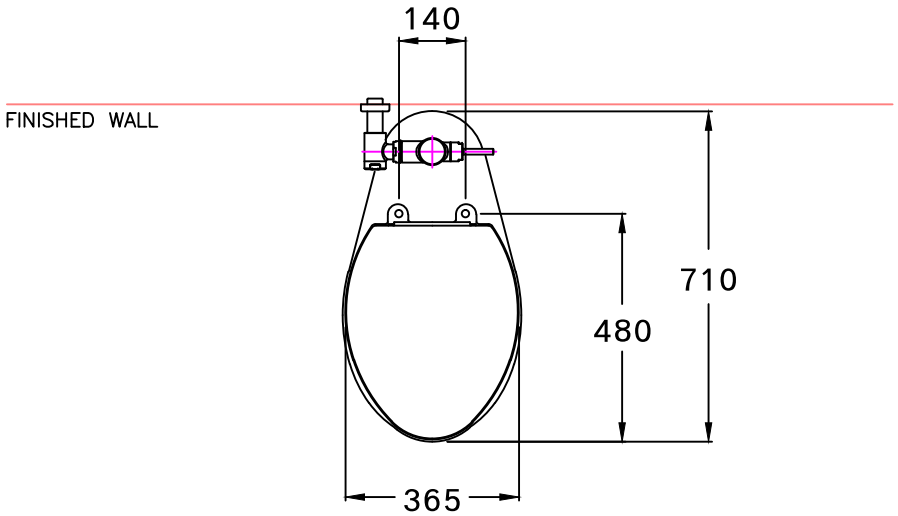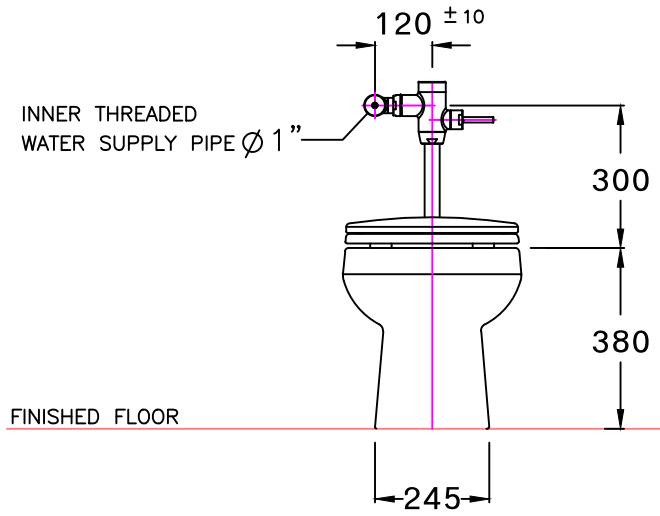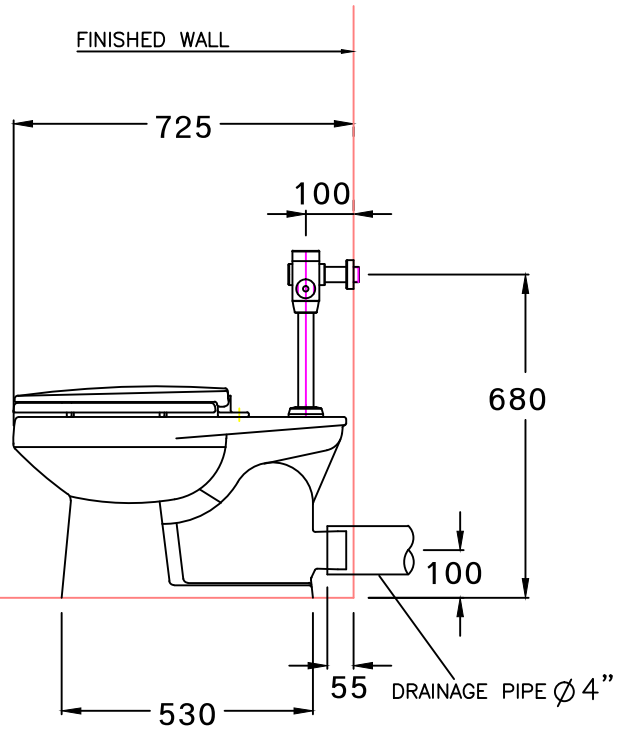CATALOG DRAWING	
MODEL	C–1330 SYDNEY–P 6 Lpf.
	CT457NS FLUSH VALVE TOP INLET
	SEAT C–91311 SOFT CLOSE
ISSUE	18–11–2558